2½" STD ARCH CURB BOX FLUSH WATER LID BRASS BOLT SCREW TYPE 24" TOP 39" BOTTOM

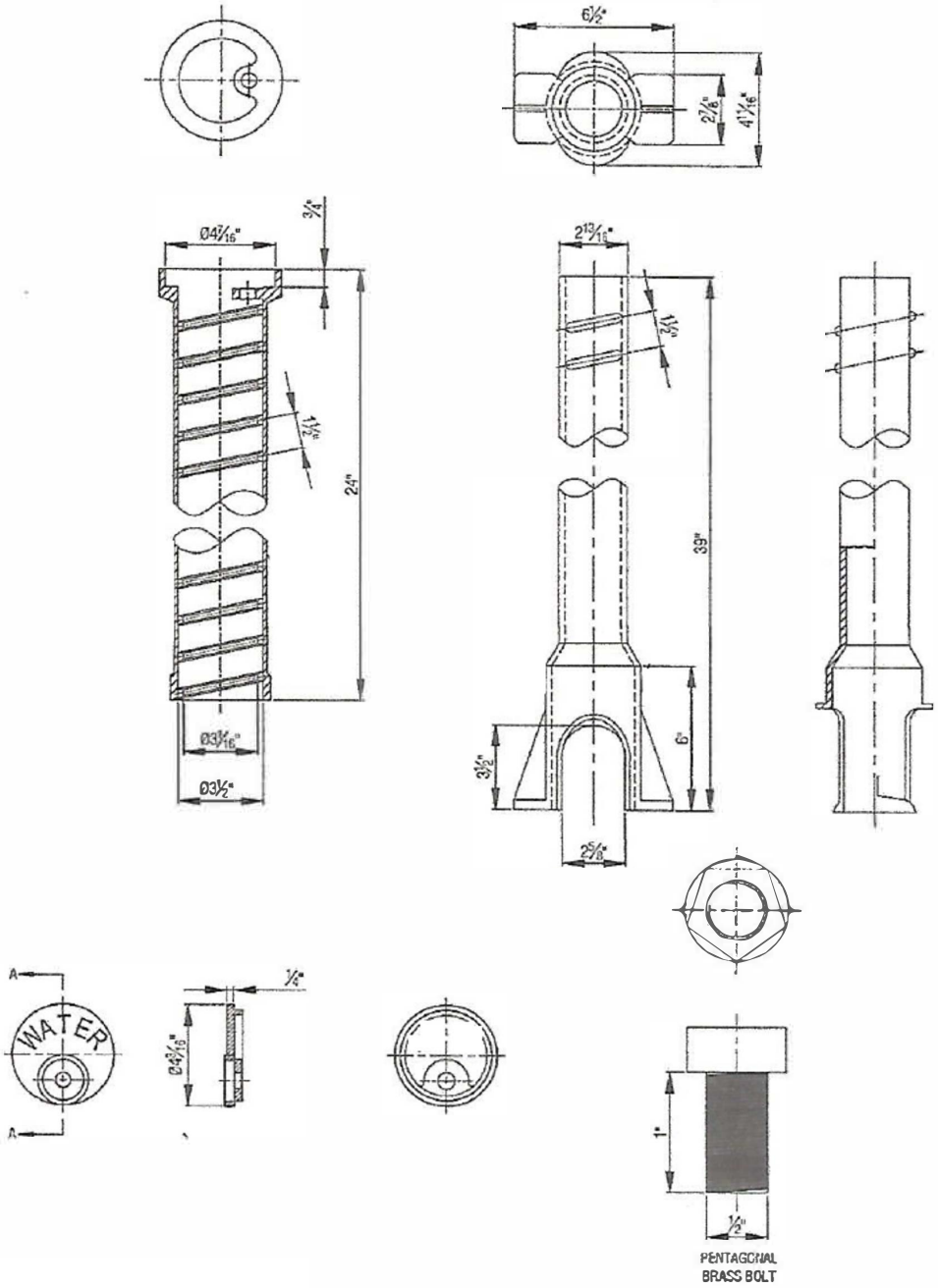

MATERIAL :- ASTM A48 CLASS 30B

94EC

CAST IRON & PLASTIC MANUFACTURING & SALES

3700 CLARKSTOWN ROAD, MUNCY, PA 17756 PHONE (570) 546-2109 WWW.CANDPMANUFACTURING.COM